LODGE II PERGOLA

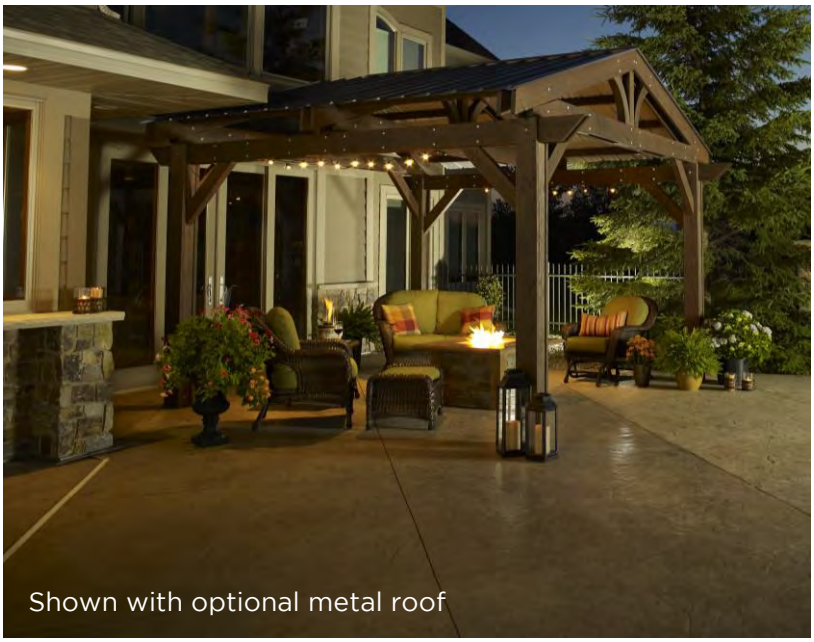
Shown with optional metal roof

MOUNTAIN LODGE OUTDOOR ROOM

Pergolas can do much more than bring all of your outdoor elements together, they bring families and friends together too. They create an attractive focal point on your deck or in your backyard—a cozy space that begs to be lived in.

FEATURES:

- Select-grade, durable Douglas Fir from Sustainable Forestry Initiative
- Precision cut and finish sanded
- Mocha water-based stained finish
- UV resistant
- Hardware and anchor plates included. Anchor hardware not included.
- Optional metal kit roof

THE OUTDOOR GREATROOM COMPANY
sales@outdoorrooms.com | 1.866.303.4028 | outdoorrooms.com

PRODUCT INFORMATION:

ITEM	ITEM CODE	RETAIL PRICE
14 x 14 Mocha Lodge II Wood Pergola	LODGE II	$7999

OPTIONAL ACCESSORIES:

ITEM	ITEM CODE	RETAIL PRICE
Metal Roof for Lodge II	ROOF-METAL	$999
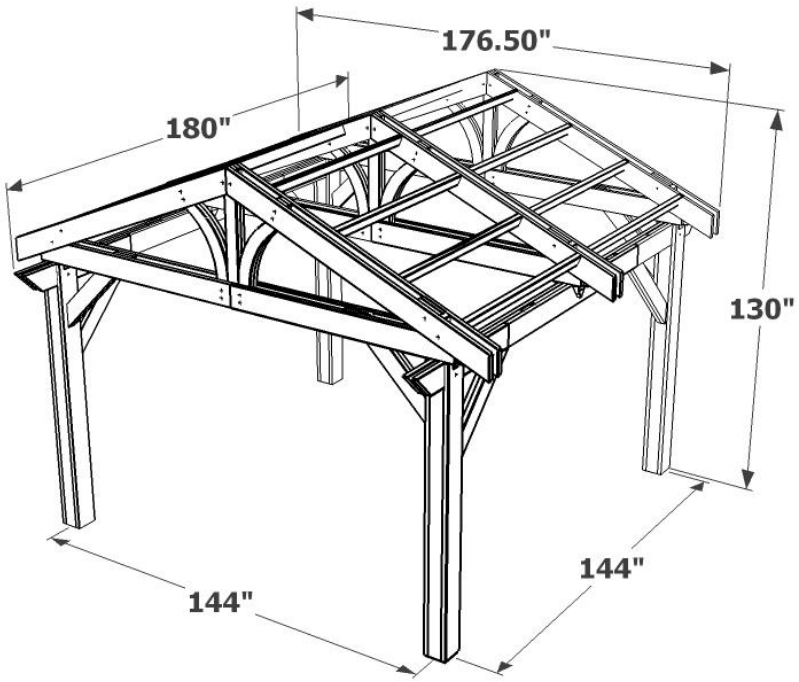
DIMENSIONS: