KEY LARGO COLLECTION

Stainless Steel Key Largo

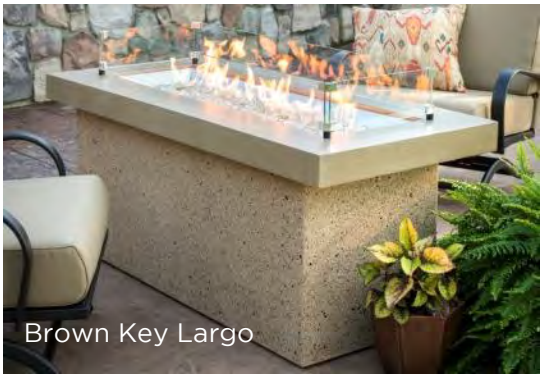
Brown Key Largo

Grey Key Largo

MODERN BEAUTY

A showcase of fire, the Key Largo fire pits feature beautiful, glowing fire that dances atop a bed of fire glass. The focal point of the design is a striking 12”x42” Stainless Steel Crystal Fire® Burner. This simple, modern design will look great in any outdoor space.

FEATURES:

- Stainless Steel trim or Polished Midnight Mist Supercast™ concrete with Black Feck stucco base, or Serengeti stucco base with Polished Brown Supercast™ concrete top
- Exterior grade frame and stucco finish base
- Grey glass burner cover included
- Sliding Access Door conceals standard 20 lb. propane tank in base
- Optional glass wind guard or folding wind guard and protective cover
- UL Listed, Made in USA

THE OUTDOOR GREATROOM COMPANY
sales@outdoorrooms.com | 1.866.303.4028 | outdoorrooms.com

PRODUCT INFORMATION:

ITEM	ITEM CODE	RETAIL PRICE
Stainless Steel Key Largo Fire Pit Table	KL-1242-SS	$1599
Grey Key Largo Fire Pit Table	KL-1242-MM	$2299
Brown Key Largo Fire Pit Table	KL-1242-BRN	$2299

OPTIONAL ACCESSORIES:

ITEM	ITEM CODE	RETAIL PRICE
Glass Wind Guard	GLASS-GUARD-1242	$249
Folding Wind Guard	FWG-1242	$299
Protective Cover For: KL-1242-SS KL-1242-MM KL-1242-BRN	 CVR5020 CVR5427 CVR5427	 $59 $59 $59

DIMENSIONS:

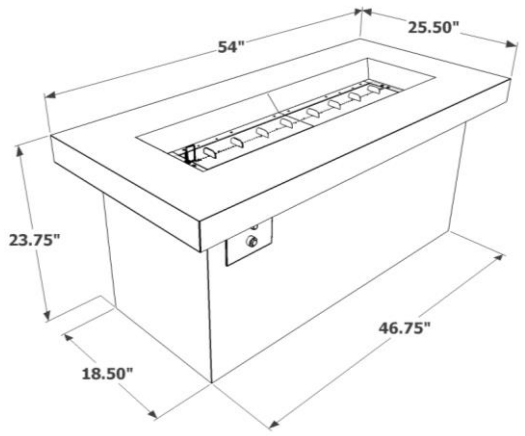

KL-1242-BRN
KL-1242-MM

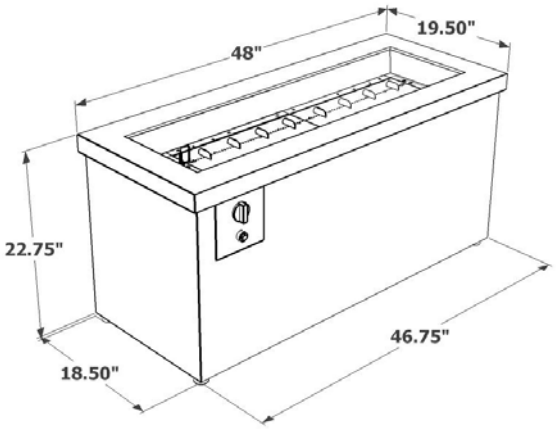

KL-1242-SS